COMPUTER SIMULATORS: APPLICATION FOR GRADUATES' ADAPTATION AT OIL AND GAS REFINERIES

Irena O. Dolganova, Igor M. Dolganov, Kseniya A. Vasyuchka
National Research Tomsk Polytechnic University – Russia

Abstract. The present paper is devoted to analysis of computer simulators efficiency in terms of graduates' adaptation at oil and gas refineries. The experience of such modeling system implementation shows that through the use of a computer simulator based on interactive simulation system we can reach high levels of enterprise employees professionalism in a short time. This, in turn, reduces the risk of abnormal and emergency situations and can finally reduce the cost of production. It will also be possible to increase the fault tolerance of the equipment by reducing the influence of the human factor and clarify regulatory requirements for the installation, including the start, emergency stop, and regular and emergency situations.

Keywords: chemical technology, computer simulators, refineries

Introduction

In the modern refineries workers with higher and secondary professional education should be employed. These workers are supposed to be able to manage complex technological processes and successfully to eliminate the emergency situations. Hence one of the most important tasks of the company's management is the periodical personnel development and training. However, when a new employee, recently graduated from university or college, is hired, he/she requires a long period of adaptation to the job. At the same time the new employee will feel the great responsibility for making decisions without relevant experience.

The solution of this problem is the use of computer simulators based on mathematical models that reflect the physical and chemical nature of processes. The simulator should create a working environment, close to the real, which will allow the employee to acquire the relevant experience without the risk of security breaches (Dolganova et. al., 2016a; Chudinova et al., 2016).

Experimental

We developed computer modeling systems and simulators for such technologies as synthetic detergents manufacturing (alkanes dehydrogenation, dienes hydrogenation, benzene alkylation and linear alkylbenzenes sulphonation stages), ethylbenzene, motor fuels production, Fisher-Tropsh synthesis (Levashova et al., 2004), water (Kuzmenko at.al., 2016; Kravtsov et.al., 1981) and gas separation. These were primary tested in educational process of National Research Tomsk Polytechnic University in bachelors and masters courses in the field of chemical technology. The analysis revealed that students get knowledges on data processing and knowledge bases, regularities of technological conditions and product quality changes, and at the end of teaching they are able to improve the equipment performance and stability.

The developed modeling systems are implemented at Kirishi, Omsk, Perm, Angarsk refineries of Russia (Dolganova et al., 2016b; Ivanchina et al., 2014; Khlebnikova et al., 2016).

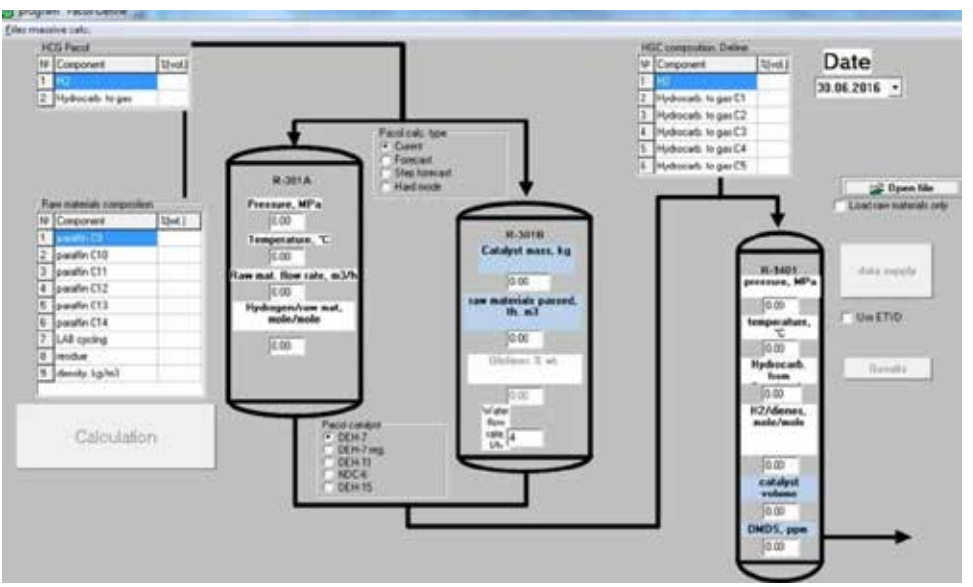

Fig. 1. Computer simulator of synthetic detergents production

Examples of developed computer simulators

Computer simulator of synthetic detergents production (Fig. 1): (i) calculation and optimization of equipment performance considering the raw materials composition; (ii) forecasting the possible date of abnormality in the HF-catalyst regeneration column performance; (iii) forecasting the dates required sulphonation reactor flushing.

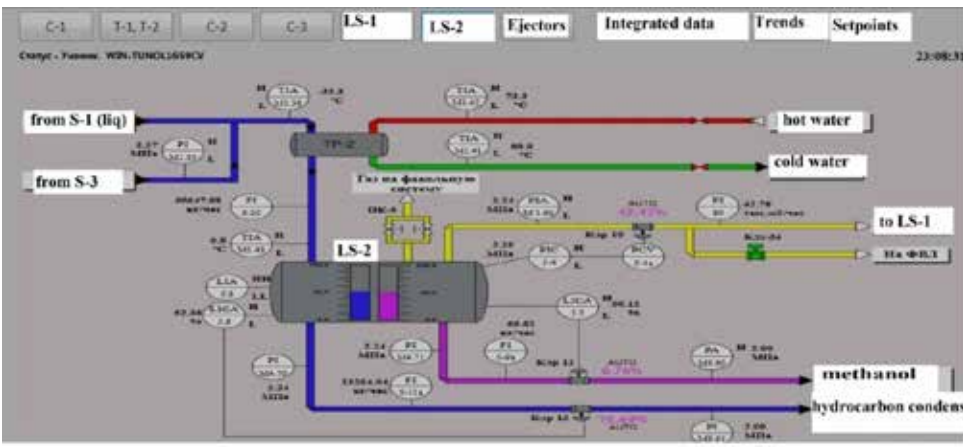

Fig. 2. Computer simulator of separation process

Computer simulator of separation process (Fig. 2): (i) calculation of basic indicators of commercial quality product with constant technological parameters of operation of the process plant within no more than 0.8 sec; (ii) forecasting of process parameters; (iii) evaluation and selection of the optimal technological operational mode; (iv) collecting information about the processes (separation, dripping, sedimentation), representation in graphical form and in the form of tabulated values of the indicators of these processes; (v) the simulator function for testing emergencies at gas treatment plant (Dolganov et al., 2015).

Conclusion

Developed mathematical models of oil and gas processing / treatment can manage the process parameters dynamically (in real time), and are effective and accessible instruments of refineries personnel and students of petrochemical profile certification. Their use as simulators allow acquiring the skills of emergencies avoiding.

The students working with computer simulators are well prepared for making decisions concerning technological modes, as they have deep knowledges in processes mechanism and regularities of modes change in dependence on current raw materials composition and catalyst activity. These make the graduates the valuable employees for modern enterprises in Russia and abroad.

Acknowledgments: The authors acknowledge the financial support of Scholarship of the President of Russian Federation for young scientists and graduate students.

REFERENCES

Chudinova, A.A., Buchatskaya, N.I., Podgorniy, V.V., Gavrikov, A.A., Ivashkina, E.N. & Dolganova, I.O. (2016). Increase of efficiency isopropylbenzene manufacturing with use of integrated mathematical models. *Petroleum & Coal*, *58*, 155 – 160.

Dolganov, I.M., Pisarev, M.O., Ivashkina, E.N. & Dolganova, I.O. (2015). Modeling of liquid separators work in gas and gas condensate preparation unit in low-temperature separation technology. *Petroleum & Coal*, *57*, 328 – 335.

Dolganova, I.O., Ivashkina, E.N., Ivanchina, E.D. & Vasyuchka, K.A. (2016a). Stability of alkylation and sulphonation units joint work in alkylbenzene sulphuric acid manufacturing. *Petroleum & Coal*, *58*, 135 – 142.

Dolganova, I.O., Dolganov, I.M. & Vasyuchka, K.A. (2016b). Formation of highly viscous component in linear alkylbenzenes sulphonation reactor and its effect on product quality. *Petroleum & Coal*, *58*, 247 – 252.

Ivanchina, E.D., Ivashkina, E.N, Dolganova, I.O. & Platonov, V.V. (2014). Effect of thermodynamic stability of higher aromatic hydrocarbons on the activity of the HF catalyst for benzene alkylation with C9-C14 olefins. *Petroleum Chem.*, *54,* 445 – 451.

Khlebnikova, E., Dolganova, I., Ivashkina, E. & Koshkin, S. (2016). Modeling of benzene with ethylene alkylation. *MATEC, 49*, no. 01001.

Kravtsov, A.V., Sudobin, N.G., Smol'yaninov, S.I., Dneprovskii, S.N., Levashova, A.I. & Maksimov, Y.V. (1981). Structure and properties of the iron catalysts in carbon monoxide hydrogenation processes. *Solid Fuel Chem., 15*(1), 6 – 14.

Kuzmenko, E.A., Usheva, N.V., Moizes, O.E. & Polyakova, K.A. (2016). Dynamics of water separation in destruction of water-in-oil emulsions. *IOP Conference Series, 43),* art. no. 012059.

Levashova, A., Usheva, N., Moizes, O. & Fedjaeva, I. (2004). Perspective of development of ficsher-tropsh synthesis. *KORUS,* No. 2*,* 63 – 64.

✉ **Ms. I.O. Dolganova (corresponding author)**
Department of Chemical Engineering and Chemical Cybernetics
National Research Tomsk Polytechnic University
30, Lenin Avenue
634050 Tomsk, Russia